Rozmery v mm; Maße in mm; Dimensions in mm

ESPERA 03 - BOK PLECH VIKO PLECH - 146R
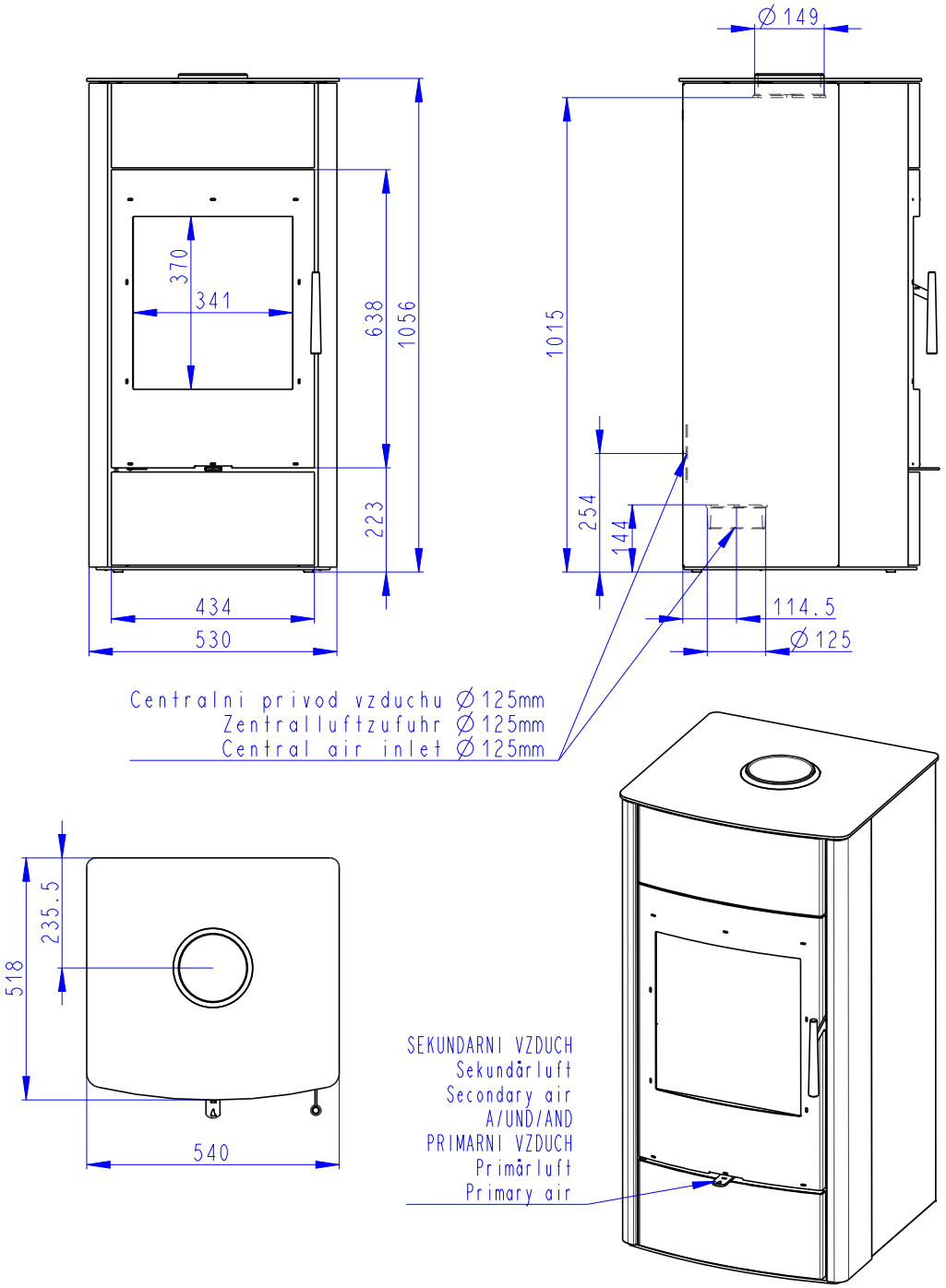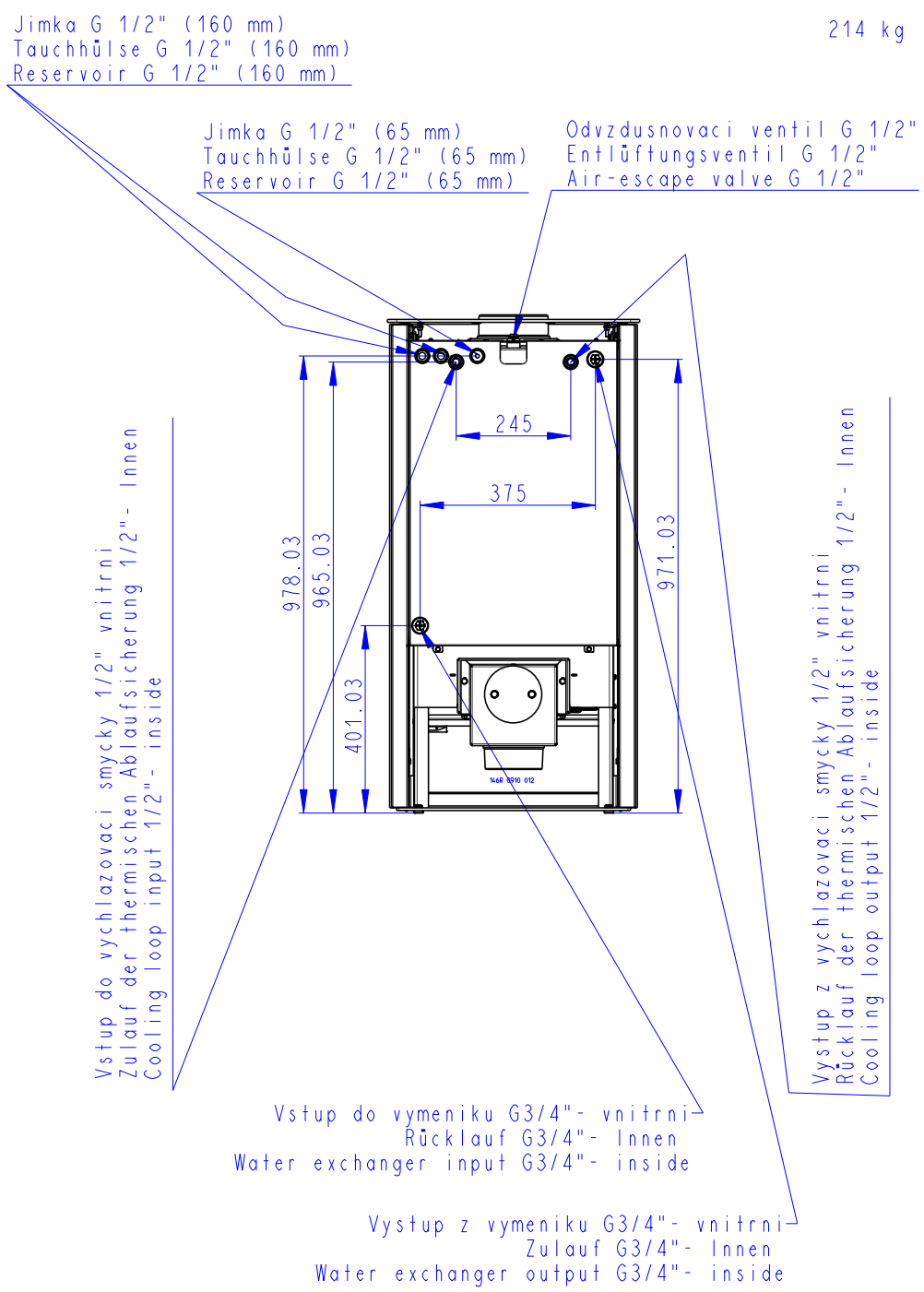
214 kg